ALLAMA IQBAL OPEN UNIVERSITY

AIOU LIBRARY
aioulibrary.com

Name:

Registration No.:

Course Code: 3576

Program: PGD (CS)

Semester: Autumn 2026

WhatsApp Orders: +92 324 5836626

ALLAMA IQBAL OPEN UNIVERSITY, ISLAMABAD

Department of Computer Science

Course: Introduction to Computer Concepts (3576/3422) • Level: PGD (CS)

Semester: Autumn 2026

Assignment No. 1

Total Marks: 100 • Pass Marks: 50

SOLVED ASSIGNMENT GUIDE — For Study & Reference

Note: This guide is prepared for study and reference purposes only. Students are advised to read the relevant units of the course book carefully, understand the concepts in their own way, and then write the assignment in their own words. Do not copy this guide word for word; use it to understand the subject, check the expected depth of each answer, and prepare your own original submission.

AIOU LIBRARY aioulibrary.com

Question 1: Basic Components of a Computer System (20 Marks)

Explain the basic components of a computer system (CPU, memory, input/output devices) and how do these components work together

Introduction

A computer system is an organised combination of hardware and software that accepts data, processes it according to a set of instructions, and produces useful information. Although computers differ greatly in size, price and purpose — from a small laptop used by a student to a large server in a bank — every computer system is built from the same basic components. Understanding these components, and the way they cooperate, is the foundation of computer

literacy, because every task a computer performs, whether typing a letter, calculating a salary sheet or playing a video, is the result of these parts working together in a carefully coordinated cycle. This answer explains the central processing unit (CPU), memory, and input and output devices, and then shows how they work together through the input–process–output cycle.

The Central Processing Unit (CPU)

The CPU is often called the brain of the computer. It is a small electronic chip, the microprocessor, mounted on the motherboard, and it is responsible for carrying out every instruction of every program. The CPU itself has two main parts. The first is the Control Unit (CU), which directs and coordinates all the activities of the system: it fetches instructions from memory, decodes what each instruction means, and sends control signals to the other components so that data moves to the right place at the right time. The second part is the Arithmetic Logic Unit (ALU), which performs all arithmetic operations such as addition, subtraction, multiplication and division, and all logical operations such as comparisons (greater than, less than, equal to) that allow the computer to make decisions. The CPU also contains a small number of very fast storage locations called registers, which hold the data and instructions currently being processed. The speed of a CPU is measured in gigahertz (GHz), and modern processors contain several cores, each of which can work on instructions independently, which greatly increases overall performance.

Memory: Primary and Secondary

Memory provides the storage space without which processing would be impossible. Primary memory, or main memory, sits close to the CPU and holds the data and programs that are

actively in use. Its most important form is Random Access Memory (RAM), a volatile memory whose contents disappear when the power is switched off; the larger the RAM, the more programs and data the computer can handle at the same time without slowing down. Read Only Memory (ROM), by contrast, is non-volatile and holds permanent start-up instructions that the computer needs the moment it is switched on. A small, extremely fast cache memory between the CPU and RAM stores frequently used data so that the processor does not have to wait for the slower main memory. Secondary memory — hard disks, solid state drives (SSDs), USB flash drives, memory cards and optical discs — provides permanent, large-capacity storage for files and programs that are not currently in use. The relationship is simple: programs and data live permanently in secondary storage, are copied into RAM when needed, and are processed from there by the CPU.

AIOU LIBRARY aioulibrary.com

Input and Output Devices

Input devices allow the user to enter data and instructions into the computer. The keyboard is used to type text and commands, the mouse and touchpad point to and select items on the screen, a scanner converts printed pages and photographs into digital form, a microphone captures sound, and a camera or webcam captures images and video. Output devices present the results of processing to the user in a usable form. The monitor or display screen shows text, pictures and video (soft copy), the printer produces output on paper (hard copy), and speakers and headphones produce sound. Some devices serve both purposes: a touch screen accepts input through touch and displays output at the same time, and a storage drive both receives data from and supplies data to the system. A complete list of typical devices is summarised in the table below.

Table 1: Basic components of a computer system and their functions

Component	Main Parts / Examples	Function
CPU — Control Unit	Control circuits on the processor chip	Fetches and decodes instructions; directs the flow of data between all components
CPU — Arithmetic Logic Unit	Arithmetic and logic circuits	Performs calculations and comparisons (decisions)
Primary memory	RAM, ROM, cache, registers	Holds programs and data currently in use; RAM is temporary, ROM is permanent
Secondary storage	Hard disk, SSD, USB drive, DVD	Stores programs and files permanently in large quantities
Input devices	Keyboard, mouse, scanner, microphone, webcam	Enter data and instructions into the computer
Output devices	Monitor, printer, speakers, plotter	Present processed results to the user

AIOU LIBRARY aioulibrary.com

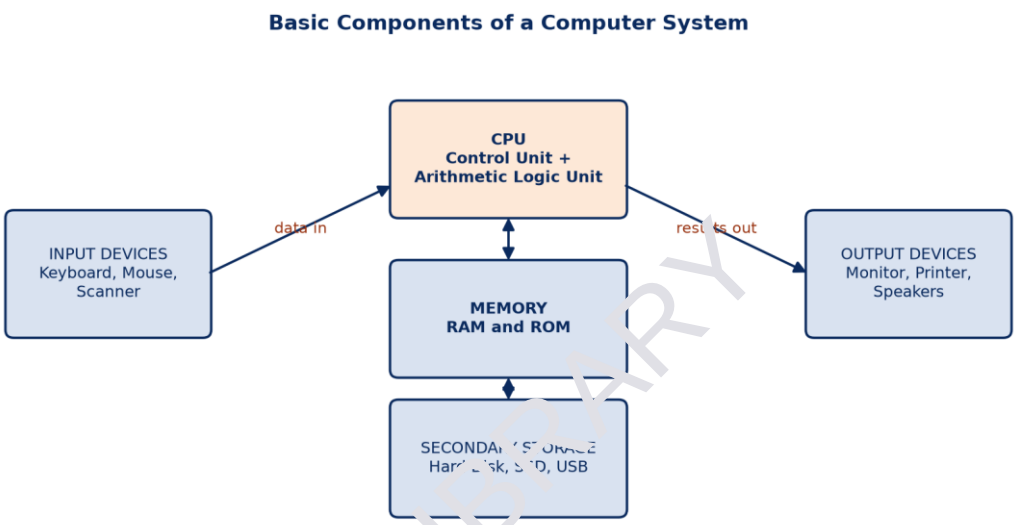

Figure 1: The basic components of a computer system and the flow of data between them.

How the Components Work Together

The components work together through a continuous cycle often summarised as input, processing, storage and output, supervised at every step by the control unit. Suppose a student types a simple calculation on a keyboard. The keyboard (input) converts each key press into binary signals and sends them to memory, where they are held in RAM. The control unit fetches the relevant instructions of the calculator program from RAM into the CPU and decodes them. The ALU performs the required arithmetic, using registers to hold the numbers during the calculation. The result is placed back in RAM and then sent to the monitor (output), where the student sees the answer. If the student saves the work, it is copied from RAM to the hard disk or SSD for permanent storage. All of this movement of data takes place along electronic pathways called buses — the data bus carries the actual data, the address bus carries the location of the data, and the control bus carries the control signals. The same pattern applies to every task: writing a document involves the keyboard, RAM, the CPU running a word processor,

the screen, and finally storage; printing simply adds the printer as the final output device. No component is useful on its own — processing power without memory has nowhere to work, memory without input has nothing to store, and output without processing has nothing meaningful to show.

Conclusion

In conclusion, a computer system is a team of specialised components: input devices bring data in, memory and storage hold data and programs, the CPU — through its control unit and arithmetic logic unit — processes the data, and output devices present the results. Their cooperation follows the fetch–decode–execute cycle repeated millions of times per second under the direction of the control unit, connected through buses on the motherboard. A balanced system needs all parts to be reasonably matched, because a very fast processor paired with too little RAM, or ample storage with no suitable output device, limits the usefulness of the whole machine.

Question 2: The Windows Operating System and the GUI Window (20 Marks)

Write a detailed note on the Windows Operating System. What are the main features and functions of a window in a GUI environment

Introduction

An operating system is the system software that controls the hardware of a computer and provides the environment in which all other programs run. Microsoft Windows is the most

widely used operating system for personal computers in homes, offices and educational institutions, and for most users it is their first and main experience of computing. Windows is built around a Graphical User Interface (GUI), in which the user works with pictures — icons, menus and windows — instead of typing commands. This answer describes the Windows operating system, its main features, and then explains in detail the features and functions of a 'window', the central element of the GUI environment from which the system takes its name.

The Windows Operating System: An Overview

Windows was introduced by Microsoft in 1985 as a graphical shell over the older, command-based MS-DOS, and it developed through versions such as Windows 95, Windows XP, Windows 7, Windows 10 and Windows 11, each adding better graphics, security, networking and support for new hardware. When a computer running Windows is switched on, the operating system loads from the hard disk or SSD into memory and presents the Desktop — the main working area containing icons, shortcuts and the background picture. At the bottom of the screen, the Taskbar carries the Start button, through which programs, files, settings and search are reached; it also shows the programs currently running and the system tray with the clock and status icons. Windows is a multitasking system: several programs can remain open at once, and the user can switch between them instantly. It is also a multi-user system, allowing separate password-protected accounts on one machine, and it supports Plug and Play, which means most new devices — printers, USB drives, cameras — are recognised and configured automatically when they are connected.

Main Features of Windows

- Graphical User Interface: all work is done through icons, menus, buttons and windows operated with a mouse or touch, so the user does not need to memorise commands.
- Multitasking and window management: many programs can run simultaneously, each in its own window, and the user can arrange, resize and switch between them freely.
- File management: File Explorer organises data in drives, folders and files; files can be created, copied, moved, renamed, searched and deleted easily, and the Recycle Bin allows deleted files to be restored.
- Built-in applications: Windows includes useful programs such as Notepad and WordPad for text, Paint for drawing, a calculator, media players, a web browser and security tools, so basic work is possible without extra software.
- Networking and internet support: Windows connects to local networks and the internet by cable or Wi-Fi, supports file and printer sharing, and includes protection such as Windows Security and Firewall.
- Compatibility and support: because Windows is so widespread, almost all popular application software and hardware devices are designed to work with it, and help is widely available.

These features explain why Windows became the standard desktop operating system: it hides the technical complexity of the hardware behind a consistent visual environment, so that once a person learns to work with menus, icons and windows in one program, the same skills apply in almost every other program.

The Window: Features and Functions in a GUI Environment

A window is a rectangular area on the screen in which a program, folder or document is displayed and worked upon. Every program in Windows opens in its own window, and managing windows well is the basic skill of GUI computing. A standard window has several recognisable parts, listed in the table below, and it offers a standard set of functions: it can be opened and closed, maximised to fill the screen, minimised to a button on the taskbar and restored again, moved by dragging its title bar, and resized by dragging its borders or corners. Two or more windows can be placed side by side so that data can be compared or copied between programs — for example, copying a figure from a spreadsheet into a word-processed report. Dialog boxes are a special kind of window that appear when the program needs information from the user, such as choosing a file to open or confirming print settings.

AIOU LIBRARY aioulibrary.com

Table 1: Parts of a window in a GUI environment and their functions

Part of the Window	Function
Title bar	Shows the name of the program and the document; used to drag (move) the window around the screen
Minimise button	Shrinks the window to a button on the taskbar without closing the program
Maximise / Restore button	Enlarges the window to fill the whole screen, or restores it to its previous size

Close button	Closes the window and ends the program or document session
Menu bar	Lists commands grouped under headings such as File, Edit, View and Help
Toolbar / Ribbon	Presents frequently used commands as clickable buttons and icons
Scroll bars	Appear when the contents are larger than the window; allow vertical and horizontal movement through the contents
Status bar	Displays information about the current state, such as page number, word count or zoom level
Work area (client area)	The main area in which the document or contents are displayed and edited
Borders and corners	Dragging them resizes the window to the required size

AIOU LIBRARY aioulibrary.com

The window system also gives the GUI its consistency and its power. Because every window behaves in the same way — the close button is always in the same corner, menus follow the same order, and common operations such as opening, saving and printing appear in the same

menus — learning becomes cumulative rather than starting again with each program. Windows can overlap like papers on a desk, the active window (the one receiving the keyboard input) is highlighted, and features such as Snap assist in recent versions help the user arrange windows neatly. In short, the window is not merely a frame on the screen; it is the unit in which programs run, documents are displayed and multitasking becomes visible and manageable.

Conclusion

To conclude, Microsoft Windows is a GUI-based, multitasking operating system that manages hardware, files, programs and security behind a friendly visual desktop, supported by the Start menu, taskbar and File Explorer. Within that environment, the window is the fundamental working unit: through its title bar, control buttons, menus, toolbars, scroll bars and work area, it lets the user open, move, resize, arrange and close programs and documents with ease. Mastering windows — opening several at once, switching between them, and arranging them side by side — is the key practical skill that makes a GUI environment productive.

Question 3: Data Communication and the Purpose of a Network (20 Marks)

Write a detailed note on Data Communication. What is the main purpose of a network in data communication

Introduction

Data communication means the exchange of data between two or more devices through some transmission medium, such as wire, cable or radio waves. Whenever an email is sent, a web

page is opened, a bank balance is checked at an ATM, or a message is delivered through a mobile phone, data communication is taking place. It is the technology that has turned isolated computers into the connected world of offices, banks, universities and the internet. This answer explains the meaning and basic elements of data communication, its modes and media, and then answers the second part of the question: the main purpose of a computer network in data communication.

Meaning and Basic Elements of Data Communication

Data communication is the process of transferring data — in the form of text, numbers, images, audio or video — from one point to another by electronic or optical means, accurately and within a reasonable time. Every data communication system has five basic elements. The message is the information to be communicated. The sender is the device that creates and sends the message, and the receiver is the device to which the message is addressed. The transmission medium is the physical path — twisted-pair cable, coaxial cable, fibre-optic cable, or the open air used by radio, microwave and satellite links — over which the message travels. Finally, the protocol is the set of rules that governs the exchange: it decides how the connection is established, how data is formatted and checked for errors, and how the exchange ends. Without common protocols, devices made by different manufacturers could not understand each other. Before transmission, data is converted into signals: digital devices produce digital signals, while media such as the traditional telephone line carry analogue signals, so devices such as modems convert between the two.

AIOU LIBRARY aioulibrary.com

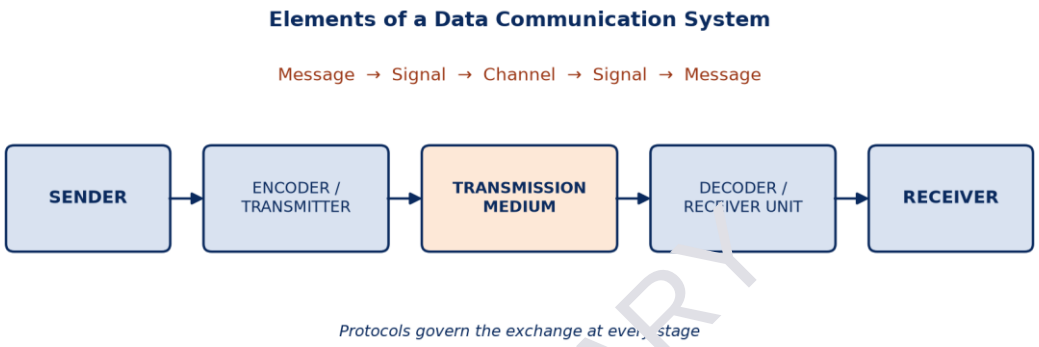

Figure 1: The five elements of a data communication system: sender, encoder/transmitter, transmission medium, decoder/receiver unit and receiver, governed by protocols.

Modes and Media of Data Communication

Communication can flow in different directions. In simplex mode, data flows in one direction only, like a television broadcast or a keyboard sending characters to a computer. In half-duplex mode, both sides can send, but only one at a time, like a walkie-talkie conversation. In full-duplex mode, both sides send and receive simultaneously, as in an ordinary telephone call and in modern network connections. The media used fall into two families. Guided (wired) media carry signals along a physical path: twisted-pair cable is cheap and common in local networks, coaxial cable offers better protection against interference, and fibre-optic cable carries data as pulses of light at very high speed over long distances with very little loss. Unguided (wireless) media use the air: radio waves for broadcasting and Wi-Fi, microwaves for point-to-point links, infrared for short-range remote controls, and satellites for communication across continents and oceans. The choice of medium depends on distance, speed, cost and the environment. The effectiveness of any data communication is judged by four characteristics: delivery (the data

must reach the correct destination), accuracy (the data must arrive unchanged), timeliness (the data must arrive without harmful delay, which is vital for audio and video), and low jitter (the variation in arrival time of packets must be small for smooth real-time communication).

Table 1: Common transmission media compared

Medium	Type	Typical use	Key Characteristic
Twisted-pair cable	Guided (wired)	Local area networks, telephone wiring	Cheap and easy to install; limited distance
Coaxial cable	Guided (wired)	Cable television, older networks	Better shielding against interference than twisted pair
Fibre-optic cable	Guided (wired)	Backbone networks, long-distance and internet links	Very high speed and capacity; data carried as light; low loss
Radio waves / Wi-Fi	Unguided (wireless)	Wireless LANs, broadcasting	No cables; limited range; shared medium
Microwave	Unguided (wireless)	Point-to-point long-distance links	Needs line of sight between antennae
Satellite	Unguided (wireless)	Intercontinental	Covers very large

AIOU LIBRARY aioulibrary.com

		links, remote areas, GPS	areas; some signal delay

The Main Purpose of a Network in Data Communication

A computer network is a group of two or more computers and other devices connected together so that they can communicate and share resources. The main purpose of a network in data communication is exactly this: to enable fast, reliable and economical sharing — sharing of data, of hardware, of software and of communication itself. First, a network allows resource sharing: many users can use one printer, one scanner or one internet connection instead of buying a separate device for every computer, which saves considerable cost. Second, it allows information and file sharing: a file stored on one computer can be opened, copied and updated by authorised users on other computers, so teams can work on the same documents and databases without carrying storage devices from desk to desk. Third, a network provides communication facilities — email, instant messaging, video conferencing and shared calendars — which are far quicker and cheaper than physical travel or post. Fourth, networks support centralised data storage and backup: important data can be kept on a server, protected by passwords, checked for access rights and backed up regularly, which improves reliability and security compared with data scattered on individual machines. Fifth, networks make shared and distributed work possible: centralised programs and databases, such as a bank's customer accounts or a university's student records, can be used simultaneously from many locations. Networks are classified by size as LAN (within a building), MAN (within a city) and WAN (across

countries, the internet being the largest WAN). In summary, the purpose of the network is to turn separate computers into one cooperative system in which resources, data and communication are shared.

Conclusion

In conclusion, data communication is the electronic transfer of data between a sender and a receiver through a medium, under agreed protocols, using simplex, half-duplex or full-duplex modes over wired or wireless media. A network is the arrangement that makes this communication useful for groups of users: its main purpose is the sharing of data, hardware, software and communication facilities, with centralised control, backup and security. Without networks, data communication would remain a point-to-point curiosity; with them, it becomes the basis of the internet, banking, e-commerce, distance education and modern office work.

AIOU LIBRARY aioulibrary.com

Question 4: Word Processing Applications and Their Functions (20 Marks)

Write a detailed note on Word Processing Application. What is its main usage and what are some functions that can be performed in a word processor

Introduction

A word processing application is software used to create, edit, format, store and print text documents. It replaced the typewriter in offices, schools and homes because a document prepared on a word processor can be corrected, rearranged, beautified, saved and printed in any number of copies without retyping. Microsoft Word is the best-known example; other

popular word processors include Google Docs, LibreOffice Writer, WordPad and the word-processing parts of office suites on mobile phones. For a student of computer concepts, the word processor is usually the first serious application learned, and it is also the tool in which assignments — including AIOU assignments — are prepared. This answer explains what a word processing application is, describes its main usage, and details the functions that can be performed in it.

What Is a Word Processing Application?

Word processing combines two ideas: processing (working on) words (text). The application provides a screen page that closely resembles a printed page — an approach called WYSIWYG, 'What You See Is What You Get' — on which the user types at a blinking cursor, the insertion point. Text can be inserted anywhere, characters can be deleted without trace, whole paragraphs can be moved, and the document can be saved in a file and reopened at any time. Unlike a typewriter, which commits every character to paper immediately, a word processor separates composing from printing: the document remains fully changeable on screen until the user decides to print it. Modern word processors go far beyond plain text: they handle tables, pictures, charts, page numbers, headers and footers, references and even automatic contents lists, and they offer reviewing tools such as comments and track changes that allow several people to work on the same document.

Main Usage of a Word Processor

The main usage of a word processing application is the preparation of documents: letters, applications, reports, essays, assignments, articles, books, resumes, notices, minutes of

meetings and official correspondence. In offices it is used for letters, memos, contracts and reports; in education, teachers prepare notes, question papers and handouts, while students prepare assignments and theses; publishers and writers prepare manuscripts; and at home it serves for applications, CVs and personal letters. Because templates — ready-made designs for letters, resumes, certificates and reports — are included, even a beginner can produce a properly laid-out document quickly. Mail merge, a feature closely associated with word processors, allows one standard letter to be personalised and printed for hundreds of recipients, each with their own name and address taken from a list, which is heavily used for admission letters, fee slips, invitations and certificates.

Functions That Can Be Performed in a Word Processor

The functions of a word processor fall into four groups: entering and editing text, formatting, managing the document, and checking and finishing. The main functions are summarised in the table below and then explained briefly.

Table 1: Main functions of a word processor

Function Group	Functions	Purpose / Examples
Text entry and editing	Typing, inserting, deleting, undo/redo, cut, copy, paste, find and replace	Compose and correct text freely; move or duplicate passages without retyping
Character formatting	Font, size, bold, italic, underline, colour,	Emphasise headings and important points; produce

	highlighting, sub/superscript	attractive documents
Paragraph formatting	Alignment, line spacing, indentation, bullets and numbering, borders and shading	Organise the document into clear, readable sections and lists
Page formatting	Margins, page size and orientation, headers, footers, page numbers, columns	Prepare the document for correct, professional printing
Inserting objects	Tables, pictures, shapes, charts, symbols, page breaks	Support the text with data and illustrations
Checking tools	Spelling and grammar check, thesaurus, word count	Remove errors and improve language before submission
Document management	Save, save as, open, print preview, print, export to PDF, protect with password	Store, share and print the finished document safely
Advanced features	Mail merge, table of contents, footnotes, comments, track changes, templates	Handle bulk letters, long documents and collaborative editing

AIOU LIBRARY aioulibrary.com

Editing functions deserve special mention because they give word processing its real advantage. The cut, copy and paste commands let the user rearrange a document as easily as rearranging ideas; find and replace can correct a repeated mistake throughout a long document in seconds; and undo reverses any action taken by mistake, encouraging the user to experiment without fear. Checking tools underline spelling mistakes as the user types and suggest corrections, while the thesaurus offers alternative words that improve expression. Formatting functions operate at three levels — character, paragraph and page — so a complete, professional appearance can be achieved: headings in larger bold type, body text justified with comfortable line spacing, page numbers in the footer, and the university or office name in the header. Finally, the document can be previewed exactly as it will print, saved for the future, shared by email, or exported as a PDF so that it looks the same on every computer.

Word Processing in Education and Office Practice

In practical educational and office work, the word processor's value appears at every stage of a document's life. A teacher drafts a question paper, corrects it after review, adds a table of marks distribution, saves a master copy and prints the required number of clean copies; next term, the same file is opened, updated and reused instead of being typed again from the beginning. An office clerk prepares a standard letter once and, through mail merge, issues it to hundreds of applicants with individual names, roll numbers and dates. A student writing an assignment benefits from the word count while drafting, checks the spelling before printing, inserts page numbers in the footer, and keeps a soft copy so that a lost printout can be replaced in minutes. Features such as password protection, document comparison and exporting to PDF extend this usefulness to confidential and shared documents. It is this

combination of easy correction, professional presentation and permanent, reusable storage that makes the word processor the natural centre of written work in institutions.

Conclusion

To conclude, a word processing application is software for creating, editing, formatting, storing and printing text documents, and its main usage is the preparation of all kinds of written material, from a one-page application to a complete book. Its functions — free editing with cut, copy, paste and find-and-replace; rich character, paragraph and page formatting; insertion of tables and pictures; spelling and grammar checking; mail merge and document management — make it faster, neater and far more flexible than any typewriter. That is why word processing remains the most widely used computer application in education, offices and everyday life.

AIOU LIBRARY aioulibrary.com

Question 5: Databases and Their Usefulness for Data Storage (20 Marks)

Write a detailed note on Databases. How are these databases useful for data storage

Introduction

We live in a world organised by stored information: a bank knows the balance of every account, a university knows the record of every student, a hospital knows the history of every patient, and an airline knows the booking on every seat. Keeping such large amounts of related information in an orderly, safe and easily searchable form is the job of a database. A database is one of the most important ideas in computing, because modern organisations do not merely store data in databases — they run on databases. This answer explains what a database and a

database management system are, how data is organised inside them, and then shows in detail how databases are useful for data storage.

What Is a Database?

A database is an organised collection of related data stored electronically so that it can be easily accessed, managed and updated. The data is arranged in tables made of rows and columns: each table holds data about one kind of thing, such as Students, Courses or Fee Records; each row (record) describes one particular student, course or payment; and each column (field) holds one attribute, such as name, roll number or amount. Tables are connected through common fields — for example, a student's roll number appearing in both the Students table and the Fee Records table links the two, so that all information about one student can be brought together when needed. The software used to create and control a database is called a Database Management System (DBMS); well-known examples are Microsoft Access for small databases, and MySQL, Oracle, Microsoft SQL Server and PostgreSQL for large ones. The DBMS stands between the user and the stored data: users ask questions in a query language such as SQL, and the DBMS finds, inserts, updates or deletes the required records.

AIOU LIBRARY aioulibrary.com

Table 1: Database approach versus traditional file approach

Feature	Traditional File Approach	Database Approach
Data redundancy	Same data repeated in many files; copies often disagree	Data stored once and shared; redundancy controlled
Searching	Slow; programs written for	Fast queries in SQL; new

	each report	questions answered immediately
Consistency	Updating one file but not another causes contradictions	One central update keeps all users consistent
Security	Whole files open or closed; weak control	User-wise rights: each user sees and changes only permitted data
Multi-user access	Difficult; file locked by one user	Many users work simultaneously with controlled access
Data integrity	Few checks; invalid entries common	Rules enforced (e.g. marks cannot exceed the total; roll numbers unique)
Backup and recovery	Manual and irregular	Systematic backup and recovery facilities built in

AIOU LIBRARY aioulibrary.com

How Databases Are Useful for Data Storage

Databases are useful for data storage in at least seven important ways. First, organised and compact storage: data is stored in structured tables with controlled redundancy, so the same

fact — a student's address, for instance — is recorded once instead of being repeated in the admission file, the fee file and the result file; this saves space and, more importantly, prevents the contradictions that arise when repeated copies are updated unevenly. Second, fast retrieval: with indexes and queries, a particular record can be found among millions in a fraction of a second — a bank clerk can call up any account, and a librarian can find any book, almost instantly. Third, accuracy and integrity: the DBMS enforces rules on the stored data, such as accepting only valid dates, unique roll numbers or marks within the allowed range, so stored data remains trustworthy. Fourth, security and privacy: access is controlled by user names, passwords and permissions, so a fee clerk can view fee data but not examination data, and sensitive records are protected from unauthorised eyes. Fifth, sharing and multi-user use: the same stored data can serve many departments and many users at the same time — admissions, accounts and examinations all work from the same student database. Sixth, backup, recovery and permanence: databases provide systematic backup copies and recovery procedures, so data survives hardware failure, power breakdown or accidental deletion. Seventh, growth and reporting: a database can grow from thousands to millions of records without changing its basic design, and stored data can be arranged into any number of reports, summaries and statistics for decision-making — enrolment trends for a university, stock positions for a shop, or dues lists for a utility company.

Examples of Databases in Daily Life

Examples confirm this usefulness. Allama Iqbal Open University itself maintains student databases covering admission, books dispatch, tutor allocation and results for hundreds of thousands of distance learners — an operation impossible with paper files. Banks run core-

banking databases that let any branch serve any customer. Pakistan's national identity records, maintained by NADRA, form one of the country's largest databases. Hospitals store patient records, airlines store reservations, mobile phone companies store call and billing records, libraries store catalogues, and every e-commerce website stores products, customers and orders in a database. In each case, the common needs are the same: store once, store safely, find instantly and share under control — exactly what a database provides.

Features Provided by a DBMS for Reliable Storage

Behind these advantages stand specific facilities that every proper DBMS provides and that students should be able to name. A data dictionary (catalogue) records the structure of the database itself — the tables, fields and rules — so the design is documented and controlled in one place. Views allow different users to see different, limited presentations of the same stored data: a student may view his or her own result through a portal, while the examination department sees the complete record. Transaction management ensures that a multi-step operation, such as deducting a fee and issuing a receipt, either completes fully or is rolled back completely, so money records are never left half-updated after a failure. Concurrency control manages simultaneous editing, preventing two clerks from overwriting each other's update to the same record. Finally, indexing works like the index of a book, giving the DBMS a fast path to any record without reading the whole table. Together these facilities explain why organisations trust databases with their most valuable stored information.

Conclusion

In conclusion, a database is an organised, table-based collection of related data managed by DBMS software, and it is useful for data storage because it stores data once without harmful duplication, retrieves any item almost instantly, enforces accuracy and integrity rules, protects data through controlled access, supports many simultaneous users, and provides backup and recovery. Compared with traditional files, the database approach makes stored data consistent, safe and genuinely usable, which is why databases stand behind banking, education, health, government and business systems everywhere.

AIOU LIBRARY
aioulibrary.com

WhatsApp Orders: +92 324 5836626